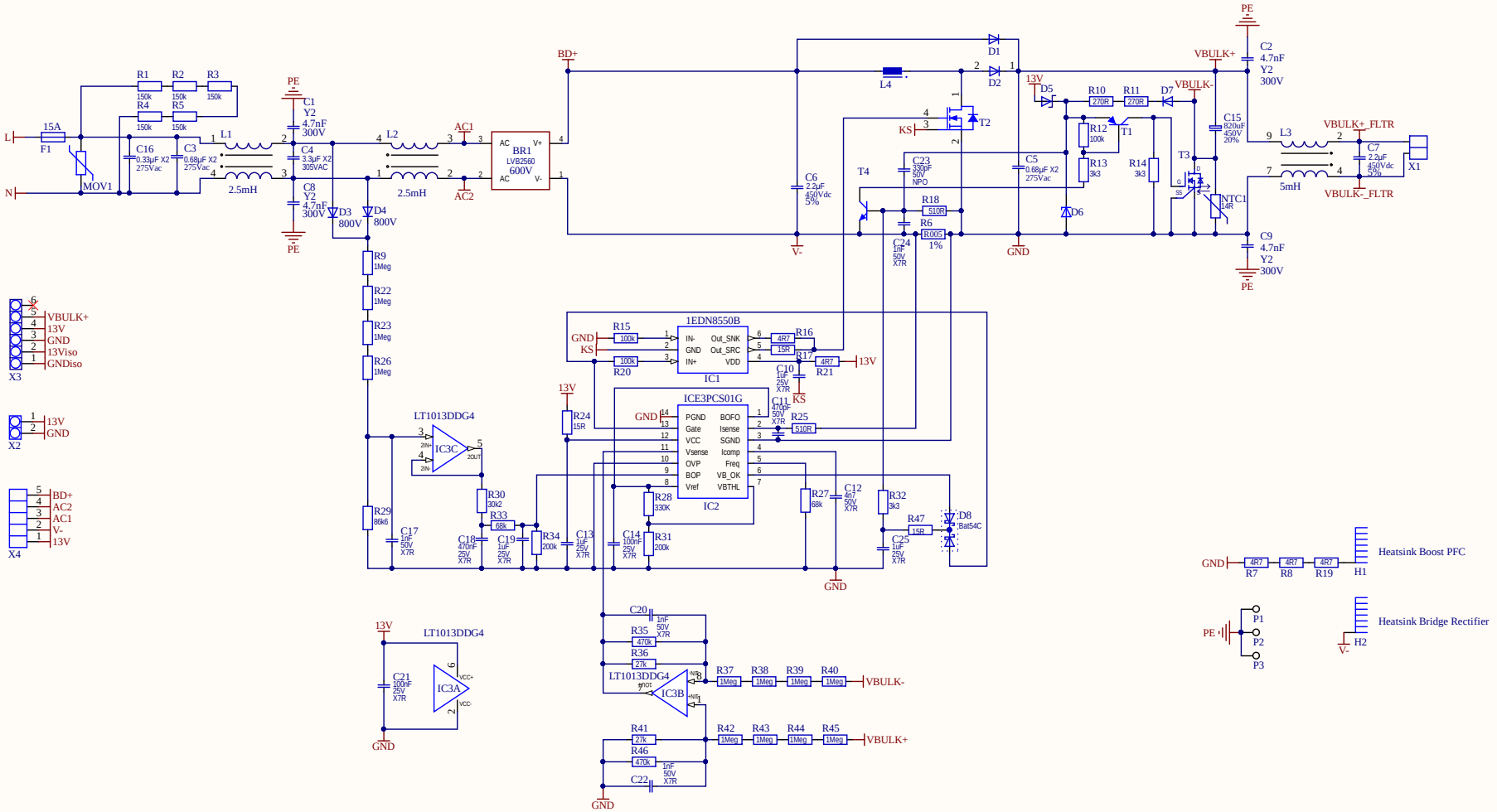

Title *		
Size: A3	Number:*	Revision:*
Date: 21.01.2020	Time: 14:36:32	Sheet * of *
File: \\Mucsdn01\IP_Mark\Power Mgmt & Supply\TM_HV\Pevere\P100002640 KIT_2K4W_ACT_BRD_S7\M100002482\M100002482		

Altium